Connectors, 45° Curved Elbow with Metric male thread (EN 60423)

Using material of high quality

IP67 TAC



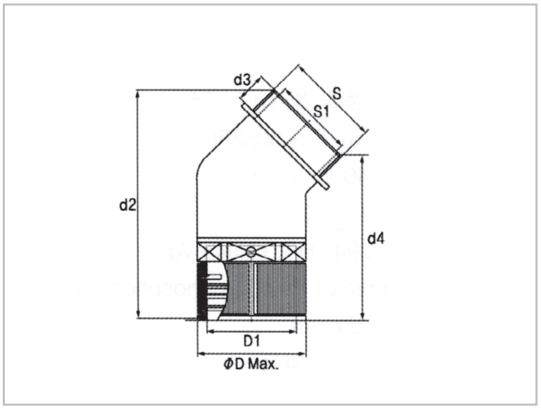

- Material: High Quality Polyamide6
- Protective: IP 67 (EN 60529)
- Temperature Range: −40°C to + 105°C
- Short Term: up to +150°C
- Self-Extinguishing: UL94-HB, UL94-Vo
  Free of Halogen Phosphorous and cadmium
- Color: Black & Gray
- Application: Machine tool, Shipbuilding, Tramway
  Industrial/ Automatic Machinery
  Printing Machine etc.
  Joint box with connector
- Certification:

- 재 질: 고품질 폴리아미드6
- 방 수 등 급: IP 67 (EN 60529)
- 적용온도범위: −40°C + 105°C
- 순간최대온도: +150°C
- 자 기 소 화 성: UL94-HB, UL94-Vo
  Free of Halogen Phosphorous and cadmium
- 색 상: 검정색, 회색
- 적 용: 공작기계, 산업기계, 자동화기계 조선소, 전동차 등 컨트롤박스에 결합하기 위한 장소에 사용됨.
- 국 제 인 증:

M Thread (EN 60423)

품 번(Order No.)		나사규격 (Thread) Metric	치수(Dimensions in mm)							적용전선관 (for tube size)
Black	Gray		D	D_1	d_2	d_3	d_4	S_1	S	
TAC-M10B	TAC-M10G	M12×1.5	23	13	56	13	50	7.4	12	10
TAC-M12B	TAC-M12G	M16×1.5	25	17	60	13	52	11.1	16	12
TAC-M16B	TAC-M16G	M20×1.5	30	22	65	13	51	15.2	20	16
TAC-M22B	TAC-M22G	M25×1.5	41	30	78	15	62	19.4	25	22
TAC-M28B	TAC-M28G	M32×1.5	47	36	90	15	70	24.4	32	28
TAC-M36B	TAC-M36G	M40×1.5	56	44	102	20	76	35	40	36
TAC-M48B	TAC-M48G	M50×1.5	68	55	123	20	86	43	50	48